DocuSign Envelope ID: 9D92F53E-F3F9-464B-8648-0BDE578DE24C

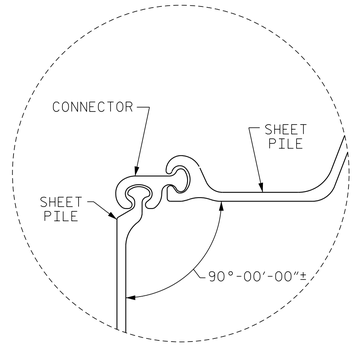

DETAIL "B"

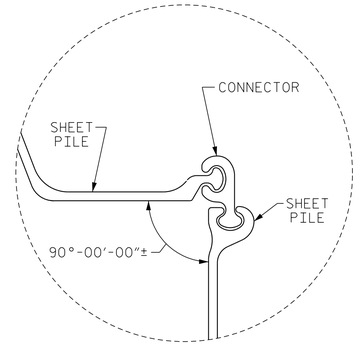

DETAIL "C"

BAR TYPES

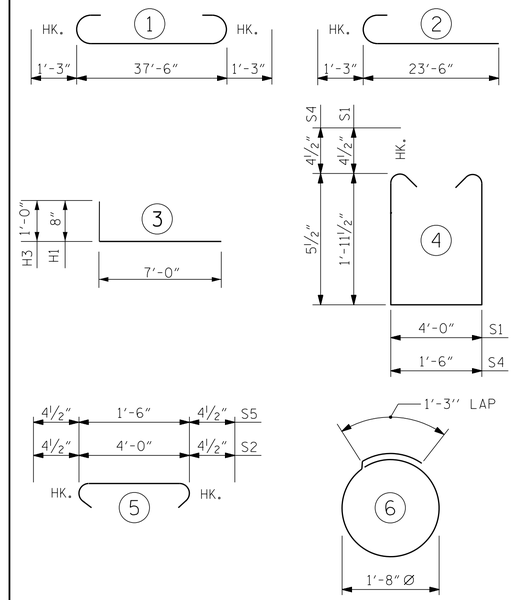

ALL BAR DIMENSIONS ARE OUT TO OUT.

BILL OF MATERIAL FOR ONE END BENT

BAR	NO.	SIZE	TYPE	LENGTH	WEIGHT
* B1	6	#9	1	40'-0"	816
* B2	12	#9	2	24'-9"	1010
* B3	4	#5	STR	37'-6"	156
* B4	8	#4	STR	20'-2"	108
* B5	10	#4	STR	4'-0"	27
* D1	20	#6	STR	1'-6"	45
* H1	4	#4	3	7'-8"	20
* H2	4	#4	STR	7'-0"	19
* H3	4	#6	3	8'-0"	48
* K1	12	#4	STR	3'-10"	31
* S1	50	#4	4	8'-8"	289
* S2	50	#4	5	4'-9"	159
* S3	10	#4	6	6'-6"	43
* S4	14	#4	4	3'-2"	30
* S5	14	#4	5	2'-3"	21
* V1	24	#4	STR	3'-10"	61

* EPOXY COATED REINFORCING STEEL LBS 2,883

CLASS AA CONCRETE:

POUR #1: CAP 15.8 C.Y.

POUR #2: EAR WALLS & COPING 1.6 C.Y.

TOTAL 17.4 C.Y.

END BENT No. 1	END BENT No. 2
12" PRESTRESSED CONCRETE PILES NO: 5 LIN. FT.= 200	12" PRESTRESSED CONCRETE PILES NO: 5 LIN. FT.= 200
PILE DRIVING EQUIPMENT SETUP FOR 12" PRESTRESSED CONCRETE PILES EACH: 5	PILE DRIVING EQUIPMENT SETUP FOR 12" PRESTRESSED CONCRETE PILES EACH: 5
GALVANIZED STEEL SHEET PILES	GALVANIZED STEEL SHEET PILES
NO. = 36 SQ. FT. 1132.1	NO. = 36 SQ. FT. 1127.8
NO. CONNECTOR = 2 SQ. FT. 7.9	NO. CONNECTOR = 2 SQ. FT. 7.8
TOTAL NO. = 38 SQ. FT. 1140.0	TOTAL NO. = 38 SQ. FT. 1135.6

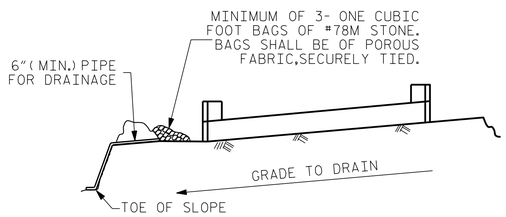

BAGGED STONE AND PIPE SHALL BE PLACED IMMEDIATELY AFTER COMPLETION OF END BENT EXCAVATION. PIPE MAY BE EITHER CONCRETE, CORRUGATED STEEL, CORRUGATED ALUMINUM ALLOY, OR CORRUGATED PLASTIC. PERFORATED PIPE WILL NOT BE ALLOWED.

BAGGED STONE SHALL REMAIN IN PLACE UNTIL THE ENGINEER DIRECTS THAT IT BE REMOVED. THE CONTRACTOR SHALL REMOVE AND DISPOSE OF SILT ACCUMULATIONS AT BAGGED STONE WHEN SO DIRECTED BY THE ENGINEER. BAGS SHALL BE REMOVED AND REPLACED WHENEVER THE ENGINEER DETERMINES THAT THEY HAVE DETERIORATED AND LOST THEIR EFFECTIVENESS.

NO SEPARATE PAYMENT WILL BE MADE FOR THIS WORK AND THE ENTIRE COST OF THIS WORK SHALL BE INCLUDED IN THE UNIT CONTRACT PRICE BID FOR THE SEVERAL PAY ITEMS.

TEMPORARY DRAINAGE AT END BENT

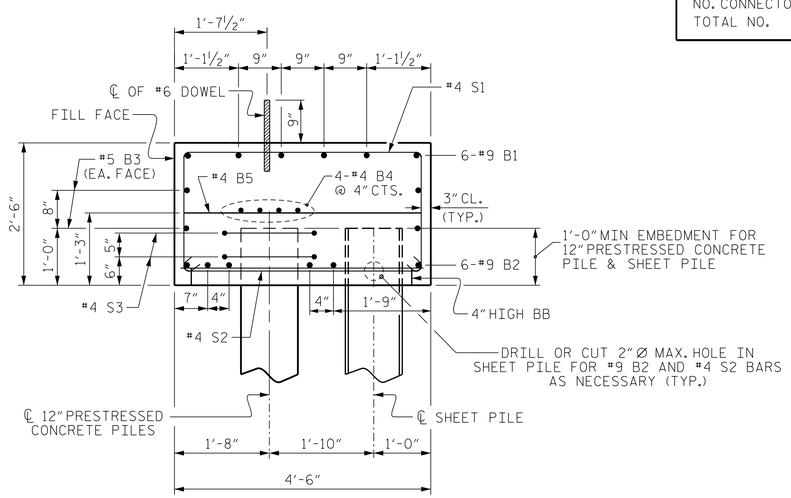

SECTION A-A

PROJECT NO. 17BP.1.R.82

HYDE COUNTY

STATION: 13+23.50 -L-

SHEET 4 OF 4

ENGINEER OF RECORD:

Docusigned by: Gregory M. Gilland

NORTH CAROLINA PROFESSIONAL SEAL 37400 ENGINEER GREGORY M. GILLAND

8/11/2017

WETHERILL ENGINEERING

1223 Jones Franklin Rd.
Raleigh, N.C. 27606
Bus: 919 851 8077
Fax: 919 851 8107
LICENSE NO. F-0377

STATE OF NORTH CAROLINA
DEPARTMENT OF TRANSPORTATION
RALEIGH

SUBSTRUCTURE

END BENT No. 1 & 2 DETAILS

REVISIONS							SHEET NO.
NO.	BY:	DATE:	NO.	BY:	DATE:		S-14
1			3				TOTAL SHEETS
2			4				17

DRAWN BY : G.M. GILLAND DATE : 2-27-17

CHECKED BY : D. HODGE DATE : 3-17

DOCUMENT NOT CONSIDERED FINAL UNLESS ALL SIGNATURES COMPLETED

P:\2017\17115.01_Hyde-14\Structures\DGN\Hyde14_EB_WEI.dgn
8/10/2017 3:24:56 PM